SPECIFICATION	
MODEL NO.	HYD/S-1200100
CAPACITY	1200TON
STROKE	100mm
WEIGHT	about 550Kg

1200Ton*100St

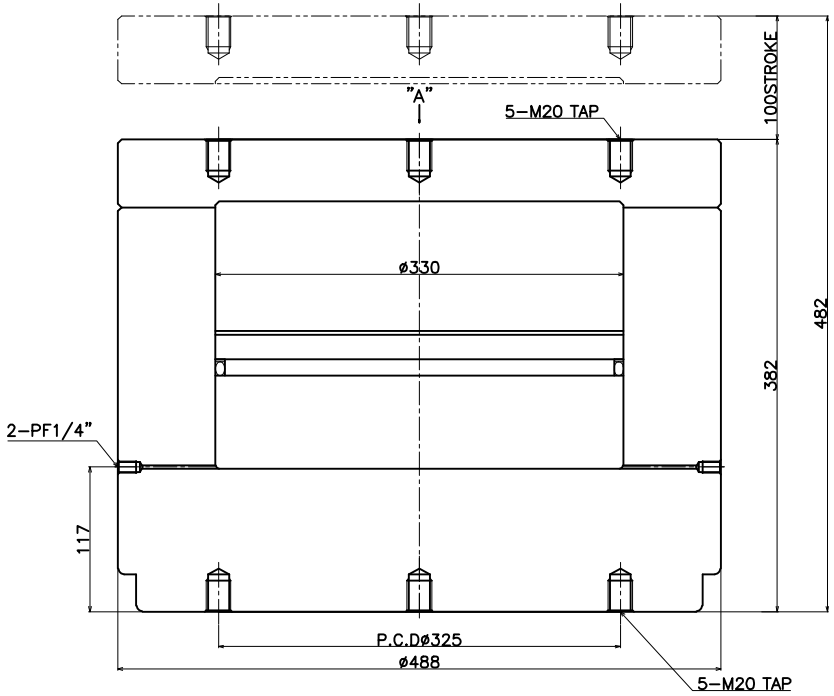

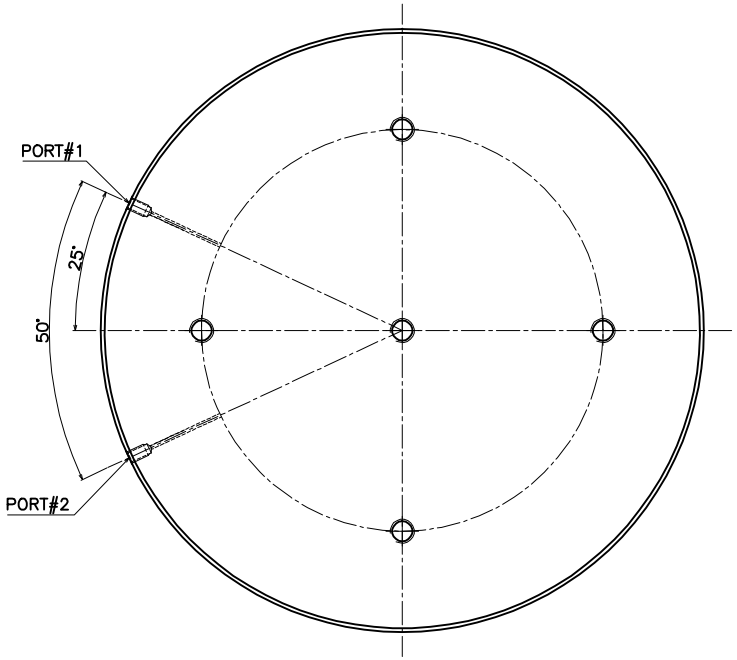

VIEW "A"

전 진	
MAXIMUM PRESSURE	2000Kgf/cm²
WORKING PRESSURE	1500Kgf/cm²
사용 유 : 유압작동유 ISO46	

C.I.K.

ITEM No.