SPECIFICATION	
MODEL NO.	HHDC 700100
CAPACITY	700TON
STROKE	100mm
WEIGHT	about 315Kg

700Ton*100St

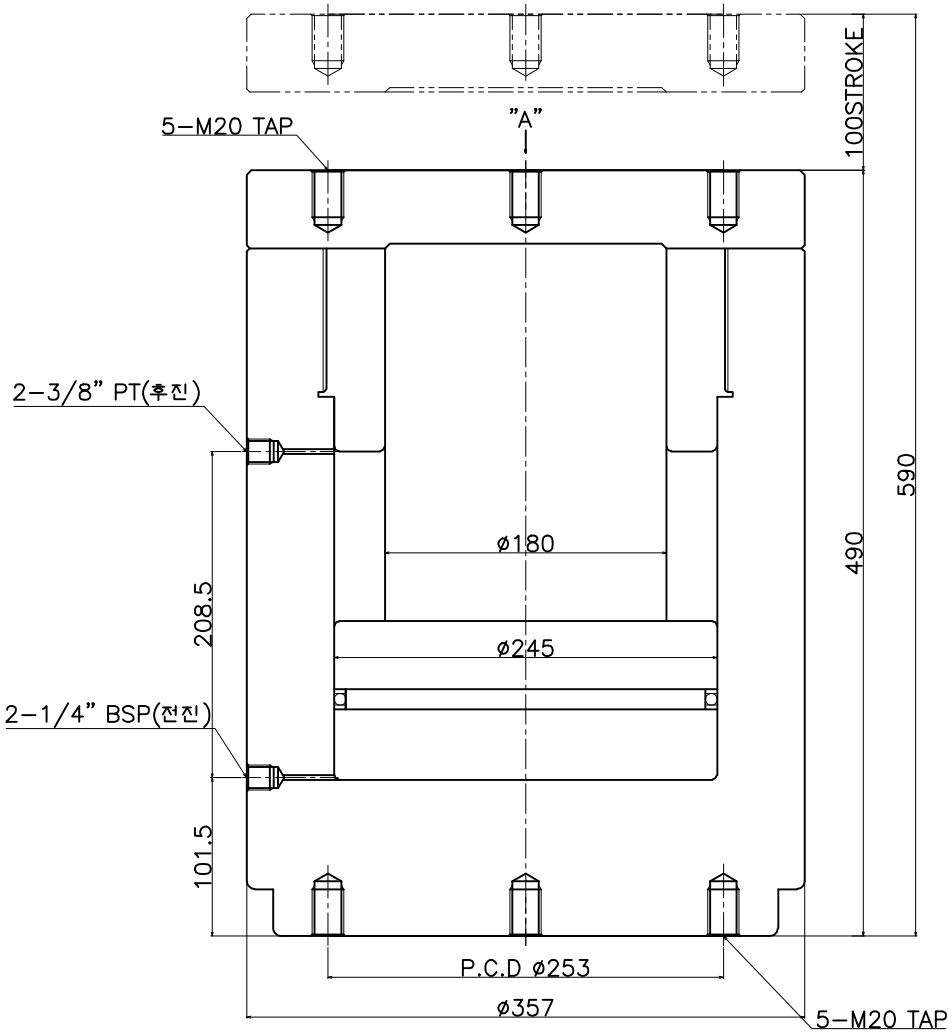

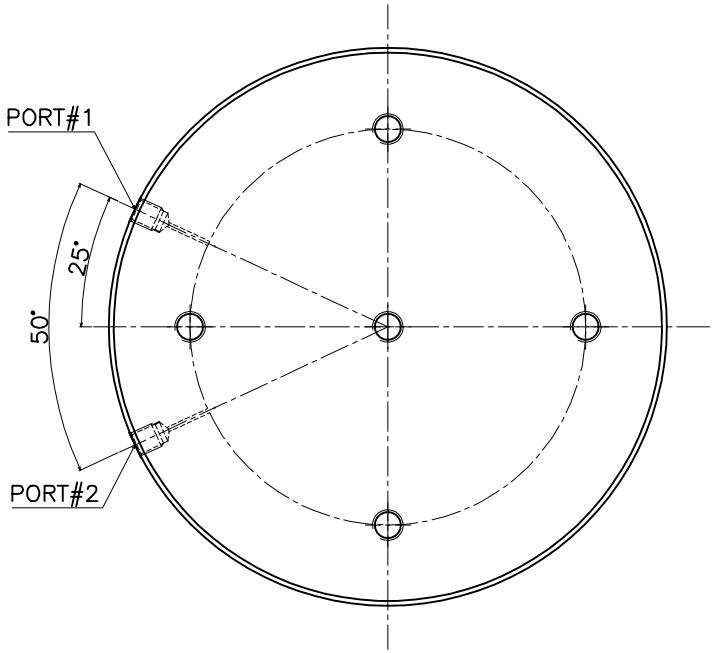

VIEW "A"

전 진		후 진	
MAXIMUM PRESSURE	2000Kgf/cm²	MAXIMUM PRESSURE	1000Kgf/cm²
WORKING PRESSURE	1500Kgf/cm²	WORKING PRESSURE	700Kgf/cm²
사용 유 : 유압작동유 ISO46			

C.I.K.

ITEM No.

CODE No.